Godox Audio Wechat Official Account
神牛影音微信公众号

Overseas Official Accounts & Updates
海外社媒平台及资讯

深圳市神牛摄影器材有限公司
地址：深圳市宝安区福海街道塘尾社区耀川工业区厂房 1 栋 4 层、2 栋 1 层至 4 层、3 栋 4 层、4 栋 1 层至 4 层　电话：0755-29609320 (8062)　传真：0755-25723423　邮箱：godox@godox.com

GODOX Photo Equipment Co., Ltd.
Add.: 4th Floor of Building 1, 1st to 4th Floor of Building 2, 4th Floor of Building 3, 1st to 4th Floor of Building 4, Yaochuan Industrial Zone, Tangwei Community, Fuhai Street, Baoan District, Shenzhen 518103, China
Tel: +86-755-29609320 (8062)　Fax: +86-755-25723423　Email: godox@godox.com

合格证
QC PASS

Made in China　**godox.com**　705-CUBEC4-01

Copyright © 2026 Godox. All Rights Reserved.

Godox

Cube-C4

使用手册

Instruction Manual

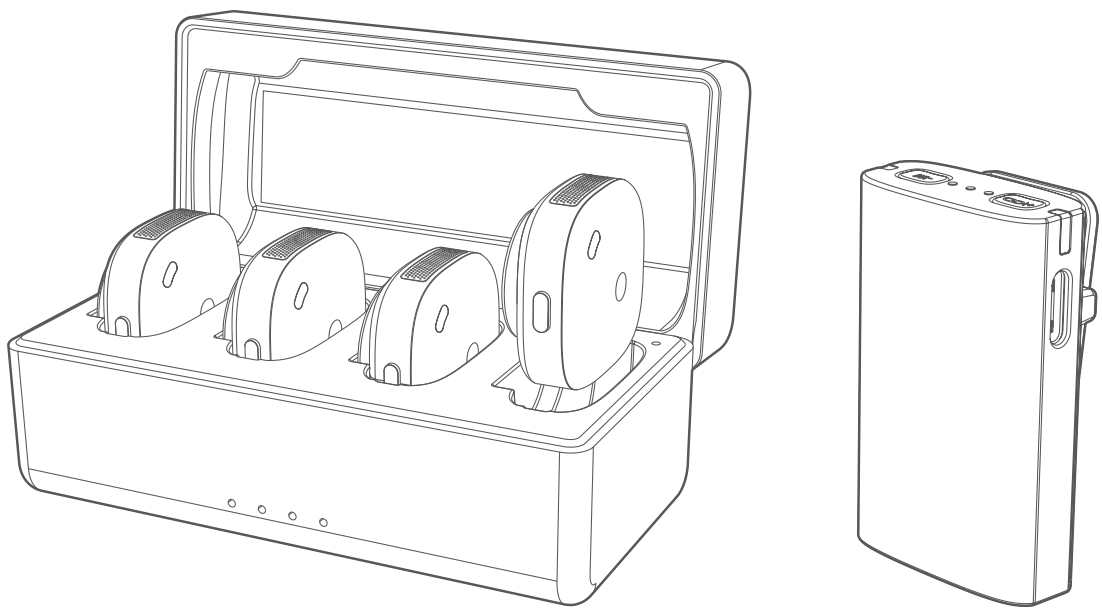

充电盒

Cube-C4 Charging Case

2.4GHz 四通道无线麦克风系统

2.4GHz Four-channel Wireless Microphone System

前言

感谢您购买神牛无线麦克风。
本产品体积小、续航长, 利用 2.4GHz 波段传输音频信号。适用于直播、采访、短视频、户外拍摄等多种场景。
使用本产品之前, 请仔细阅读说明书 , 以便正确使用。

主要特点

- 4 人同时收音;
- 小巧迷你，即插即用;
- 无损音质，一键降噪;
- -6dB 安全音轨功能，防止爆音;
- 支持电脑 UAC 直连开播 / 边充边用;
- 适用于各类品牌相机 / 手机;
- 最远无线传输距离可达 200 米（视距）。

危险

- 请勿在易燃易爆环境中使用。
- 请勿置于高温环境中。

警告

- 电池禁止拆解、撞击、挤压或投入火中。若出现严重鼓胀，请勿继续使用。请勿置于高温环境中。浸水后禁止使用。
- 电池不得暴露在诸如日照，火烤或类似过热环境中。
- 避免雨水等液体浸蚀，避免婴幼儿接触玩耍。
- 如果电池更换不当会有爆炸危险，如果用错误型号的电池组替换会有着火或爆炸的危险，只能用同样类型或等效类型的电池来更换，仅维修人员可更换，非一般人员更换。
- 本产品含强磁体，需远离磁卡、硬盘等磁敏感设备，与植入式医疗设备（如心脏起搏器、耳蜗植入物）至少保持 15 cm 距离。

注意

- 本产品不具备防水功能。严禁湿手操作或在雨天、浴室等潮湿环境中使用。
- 使用时，应放置在易散热的地方，不要放置在床头、被褥上、包裹里或其他不易散热的环境中使用。

- 消费者若使用电源适配器充电，则应购买配套使用获得 CCC 认证并满足标准要求的电源适配器。
- 严禁私自拆卸、改装、维修本产品。
- 避免跌落或撞击导致故障，故障须由授权服务人员处理。
- 为防止电池过放损坏，长期闲置时至少每 3 个月充放电一次。

物品清单



发射器 ×4

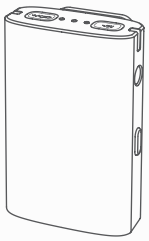

接收器 ×1

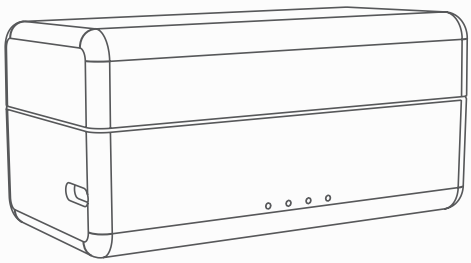

充电盒 ×1

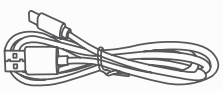

USB-C 充电线 ×1

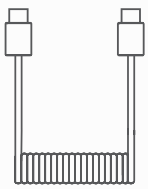

USB-C 转 USB-C 连接线 ×1

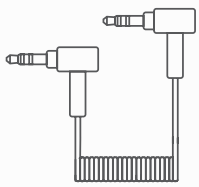

TRS 转 TRS 连接线 ×1



磁铁 ×8

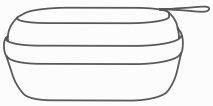

收纳包 ×1



挂绳 ×4

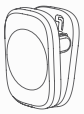

磁铁背夹 ×4



防风兔毛 ×4

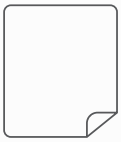

卡通贴纸 ×1



使用手册 ×1

温馨提示:
说明书中的图片均为示意图，仅供参考。由于产品不断更新与升级，产品实物与图片可能存在差异，请以实物为准。

使用说明

发射器 Cube-S TX

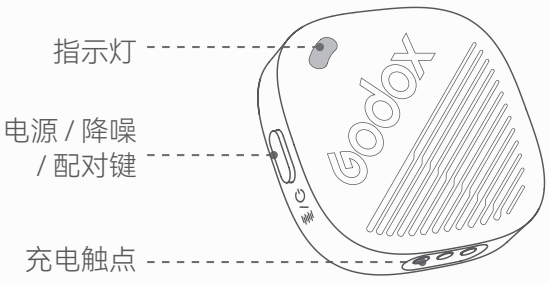

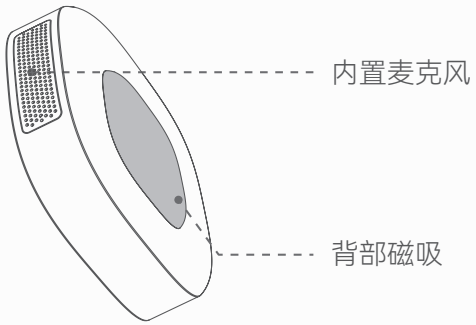

开 / 关机

从充电盒取出会自动开机，放入充电盒会自动关机。或者长按 < ↻/≡ > 键 2 秒开 / 关机。

绿色闪烁 ---- 开机未配对

注：超过 5 分钟未配对，会自动关机。

配对

快速短按两次 < ↻/≡ > 键进入配对状态。

绿色快闪 ---- 正在配对

绿色长亮 ---- 配对成功，未开降噪

降噪

短按一次 < ↻/≡ > 键开启 / 关闭降噪。

橙色长亮 ---- 开启降噪

充电

以正确的方向放入充电盒即可为产品充电。

红色闪烁 ---- 电量低

蓝色呼吸闪烁 ---- 充电中

蓝色长亮 ---- 已充满

接收器 Cube-C4 RX

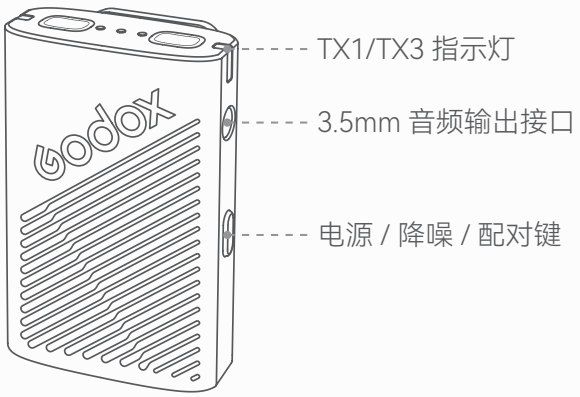

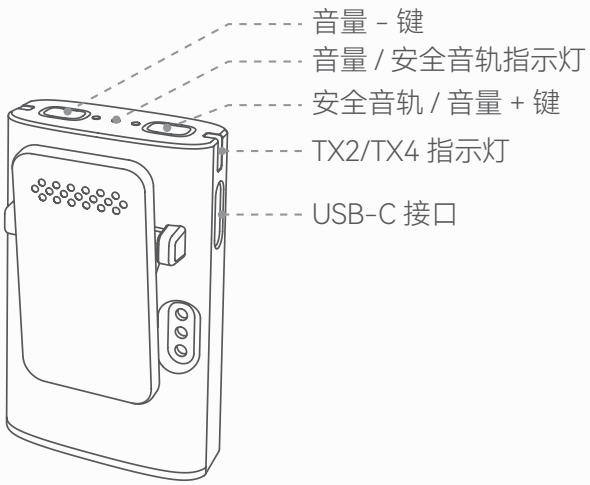

开 / 关机

长按 < ⏻ > 键 2 秒开 / 关机。

绿色闪烁 ---- **开机未配对**

注：超过 5 分钟未配对，会自动关机。

配对

快速短按两次 < 🔗/〰 > 键进入配对状态。

绿色快闪 ---- 正在配对

白色长亮 ---- TX1、TX3 或 TX2、TX4 配对成功

绿色长亮 ---- 左 / 右指示灯只有一个 TX 配对成功

配对逻辑灯光指示	
仅 TX1、TX2 已配对	指示灯绿色常亮
TX1/TX2、TX3/TX4 已配对	指示灯白色常亮
TX1/TX2、TX3 已配对，TX4 未配对	TX1/TX3 指示灯亮白色，TX2/TX4 指示灯亮绿色
ps: 以此类推，白色灯常亮对应 TX1、TX3 或 TX2、TX4 配对成功 绿色长亮 ---- 左 / 右指示灯只有一个 TX 配对成功	

降噪

短按一次 < / > 键开启 / 关闭降噪。

- **橙色长亮** ---- 开启降噪

充电

通过 USB-C 充电线连接电源为产品充电。

- **红色长亮** ---- 接收器电量低，请及时充电
- **蓝色呼吸闪烁** ---- 充电中
- **蓝色长亮** ---- 已充满

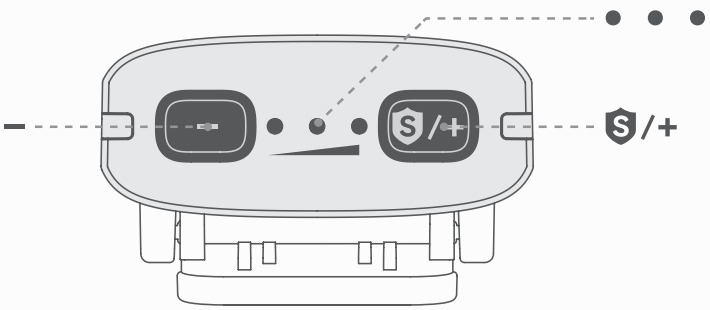

安全音轨

长按 < S/+ > 键 2 秒开启 / 关闭安全音轨。

注：安全音轨默认单声道模式，右声道以 -6dB 增益记录音频。

< ●●● > **绿色呼吸闪烁** ---- 安全音轨开启

输出音量调节

短按 < S/+ > 或 < – > 键进入音量调节状态，3s 内再次短按按键可调节音量。

< ● > **一颗灯亮起** ---- 最低档
< ●● > **两颗灯亮起** ---- 中间档
< ●●● > **三颗灯亮起** ---- 最高档

充电盒 Cube-C4 Charging Case

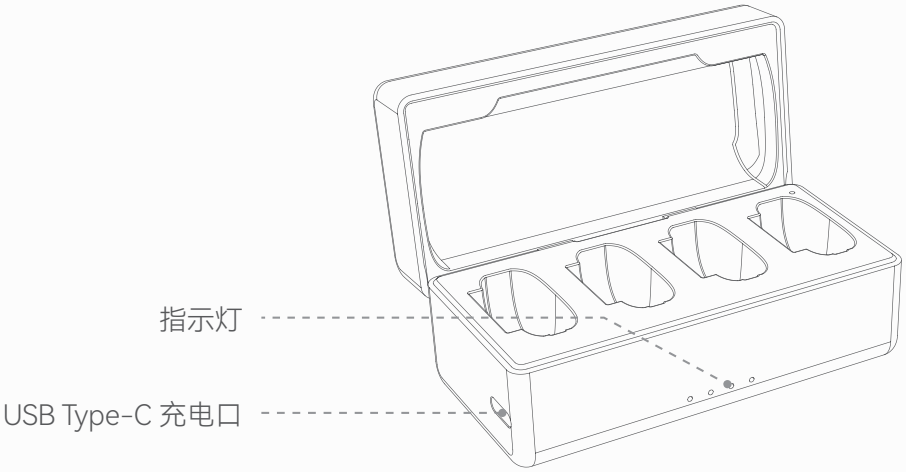

充电

通过 USB-C 充电线充电，指示灯递增式闪烁。

< •••• > **白色闪烁** ---- 充电中

< •••• > **白色长亮** ---- 已充满，充满后 10 分钟熄灭

注：每隔 3 个月左右重新充电一次以保持电池活性。长期闲置电池可能对其性能造成影响，甚至导致电池永久损坏。

麦克风佩戴

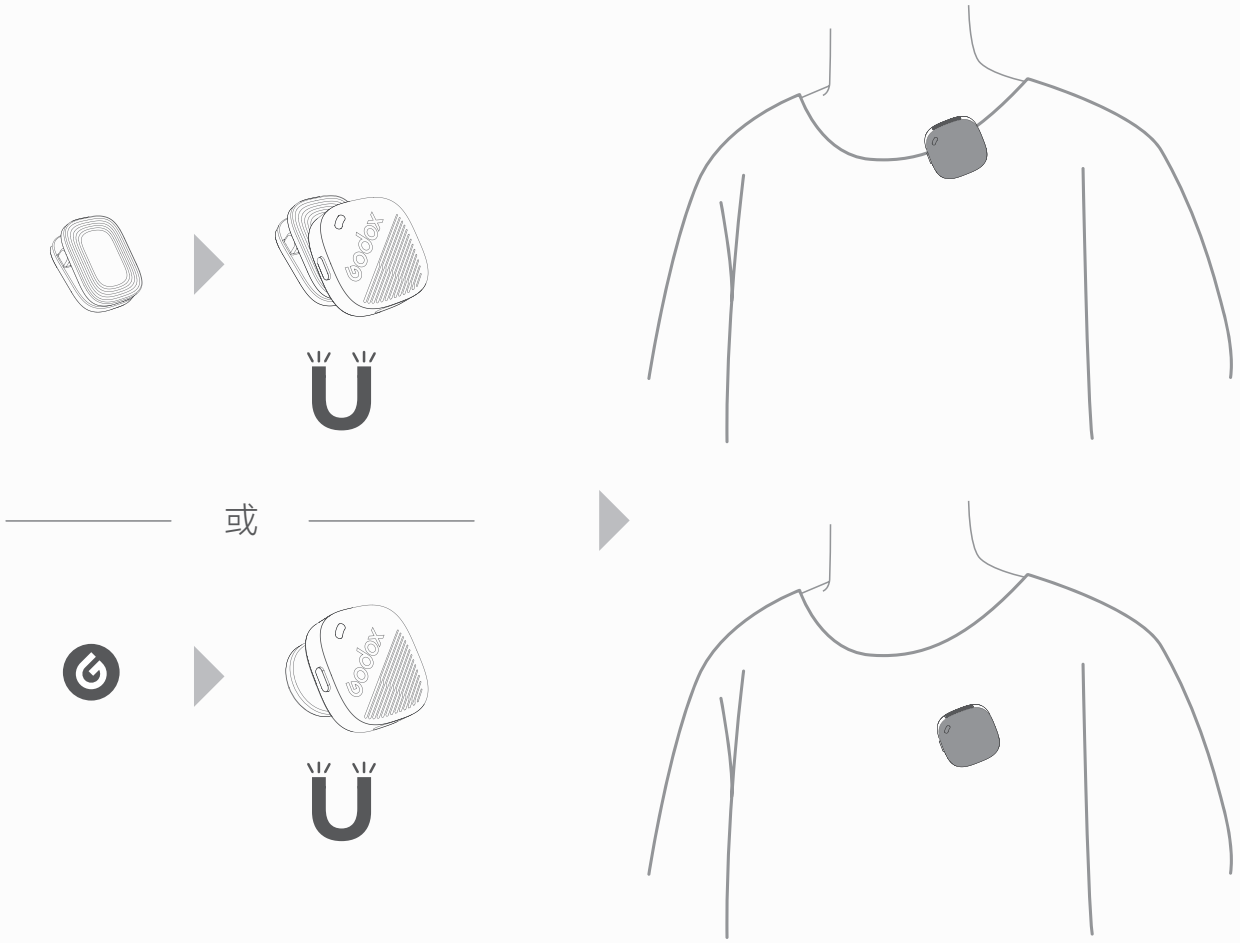

接收器与相机连接

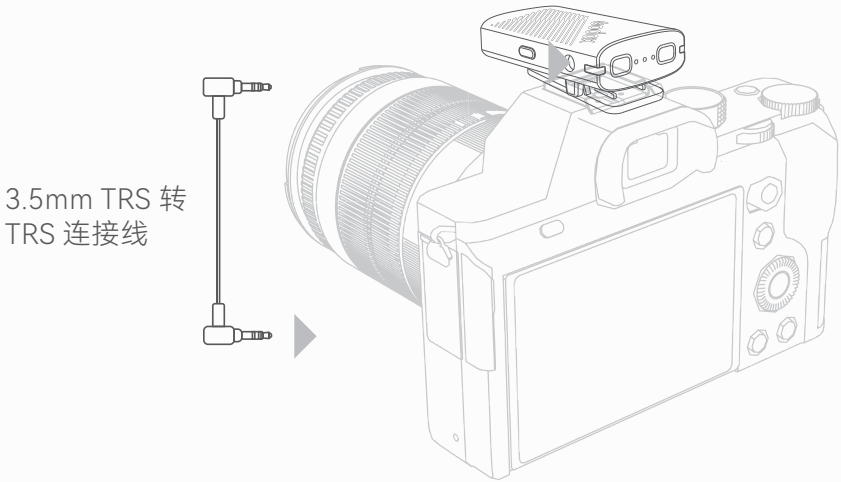

接收器与手机连接

连接 USB-C 接口手机

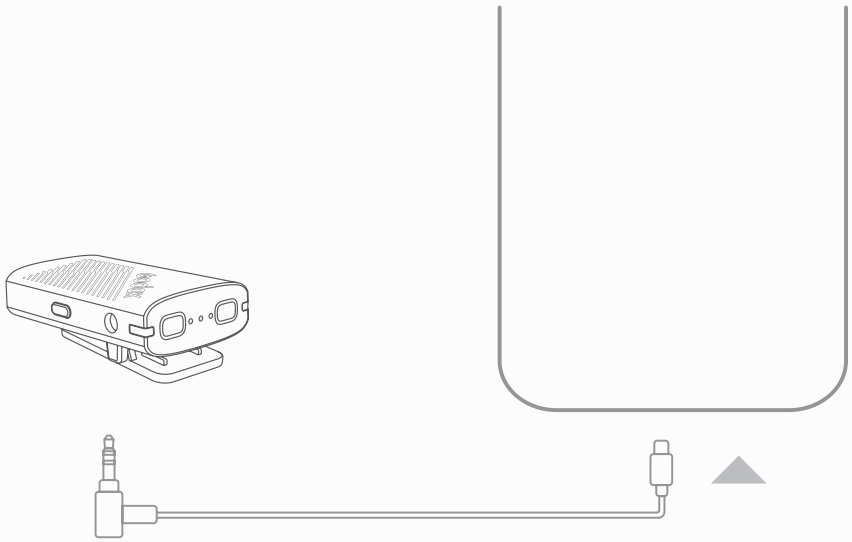

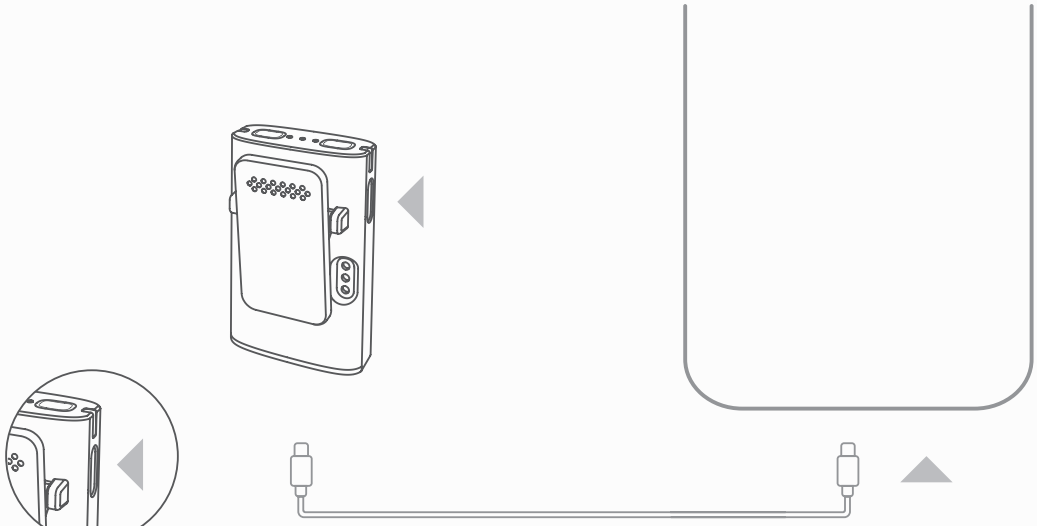

② USB-C 转 USB-C 连接线
(GAC-IC15)

连接 Lightning 接口手机

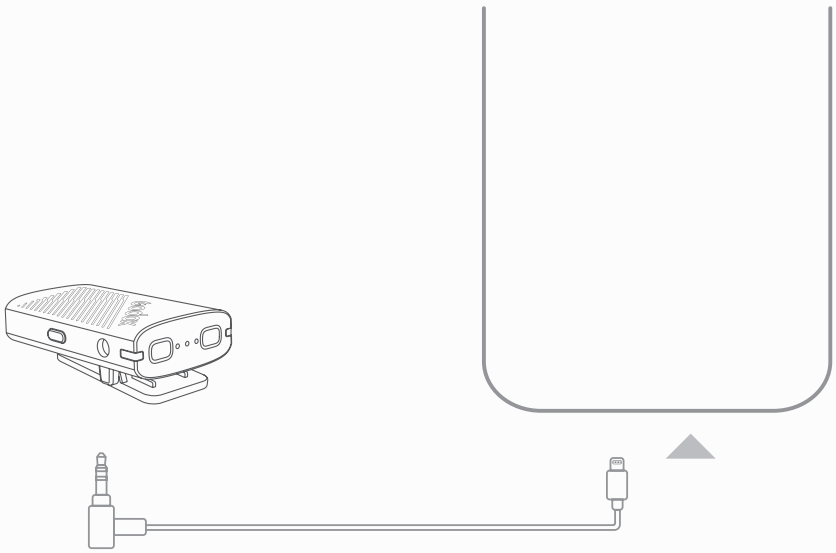

① Lightning 转 3.5mm TRS 连接线
(GAC-IC10)



② USB-C 转 Lightning 连接线
(GAC-IC16)

注：GAC-IC9/GAC-IC10/GAC-IC16 连接线需另购。

APP 下载

扫码下载 Godox Mic APP, 连接成功后可利用 APP 操作使用。
仅支持 USB-C 转 USB-C 连接线或者 USB-C 转 Lightning 连接线连接手机状态下可用。

规格参数

名称	发射器	接收器
型号	Cube-S TX	Cube-C4 RX
传输类型	2.4GHz 数字跳频系统	
拾音模式	全向型	/
频率范围	20Hz-20KHz	/
最大 SPL	115dB	/
信噪比	> 70dB	/
最大无线距离	200 米（视距）	
输入参数	5V ⎓ 90mA	5V ⎓ 200mA
锂电池参数	3.87V, 97mAh, 0.376Wh	3.8V,200mAh, 0.76Wh
续航时间	约 10 小时	约 5.5 小时（不开降噪）
充电时间	约 1.5 小时	约 1.5 小时
工作环境温度	-10℃ ~50℃	
充电温度	0℃ ~45℃	
尺寸	24.5x24.8x12.5mm	46×29×18mm
净重	≈ 7g	≈ 15g

名称	充电盒
型号	Cube-C4 Charging Case
输入参数	5V ⎓ 2A
输出参数	5V ⎓ 100mA (*4)
总输出	5V ⎓ 400mA （不带电源适配器销售）
电池能量	3.8V,2300mAh, 8.74Wh
续航时间	可为 4 个发射器充电两次
充电时间	约 2 小时
工作环境温度	-10℃ ~50℃
充电温度	0℃ ~45℃
尺寸	82×40×38mm
净重	≈ 101g

规格参数如有变更，恕不另行通知。

有害物质标识

弃置本产品时，请不要将其与一般生活垃圾放在一起，应将其交给政府指定的回收中心有利于环保。

电子电气产品有害物质申明						
部件名称	铅 (Pb)	镉 (Cd)	汞 (Hg)	六价铬 (Cr6+)	多溴联苯 (PBB)	多溴二苯醚 (PBDE)
外壳	○	○	○	○	○	○
电路板组件 *	×	○	○	○	○	○
电池组	○	○	○	○	○	○
其他配件	○	○	○	○	○	○

本表格依据 SJ/T11364 的规定编制。

*：电路板组件包括印刷电路板及其构成的零部件，如电阻、电容、集成电路、连接器等。

○：表示该有毒有害物质在该部件所有均质材料中的含量在 GB/T 26572 规定的限量要求以内。

×：表示该有毒有害物质至少在该部件的某一均质材料中含量超出 GB/T26572 规定的限量要求。

求上表中打 × 的部件，由于技术原因目前无法实现替代，今后随着技术进步，将实现替代或改进。



在本说明书所述的正常使用条件下，本仪器的环保使用期限为 10 年，在环保使用期内可以放心使用，超过环保使用期限之后则应该进入回收循环系统。

Foreword

Thank you for purchasing!

With the characteristics of compact and portable, plug and play, as well as 2.4GHz wireless transmission, this product is quite suitable for live streaming, interview, short video recording, outdoor shooting, etc.

Please read this manual carefully before using to make sure the correct operation and exert the optimum function.

Main Features

- 4 transmitters paired with 1 receiver at the same time.
- Compact and portable, plug and play.
- Clear and stable sound quality with denoise function.
- -6dB safety track mode effective prevents popping.
- Receiver supports computer UAC function, use and charge at the same time.
- Compatible with various smartphones and cameras.
- The maximum wireless transmission distance up to 200m (sight distance) after paired with transmitter.

DANGER

- Do not use in flammable or explosive environments.
- Do not place in high-temperature environments.

WARNING

- Danger of explosion if the battery are not replaced properly, danger of fire or explosion if replaced with the wrong type of battery pack, replace only with battery of the same type or equivalent. Battery replacement must be performed by authorized service personnel only.
- Do not disassemble the product or disassemble the battery.
- Do not expose the battery to excessive heat such as direct sunlight, fire, or similar environments.
- Keep out of contact with infants and young children, and children should use under adult guidance.
- Risk of explosion if the battery is replaced incorrectly. Replace only with the same or equivalent type. Batteries should only be replaced by qualified servicepersonnel.
- This product contains strong magnets. Keep away from magnetic sensitive devices (e.g., magnetic cards, hard drives) and maintain a distance of at least 15cm from implanted medical devices (e.g., pacemakers, cochlear implants).

CAUTION

- This device is not waterproof. Do not operate with wet hands or use in rainy, damp, or high-humidity environments (e.g., bathrooms).
- Place the device in a well-ventilated area during use.Do not cover the device or place it on beds, blankets, or inside bags where heat dissipation may be blocked.
- When charging, use a power adapter that meets certified safety standards.
- Do not disassemble, modify, or repair this product without authorization.
- Avoid drops or strong impacts. Malfunctions must be handled by authorized Godoxservicepersonnel.
- Charge and discharge the battery at least once every 3 months during long-term storage to prevent damage from over-discharge

What’s Inside



Transmitter ×4

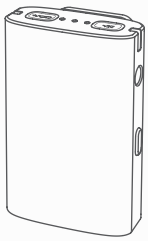

Receiver ×1

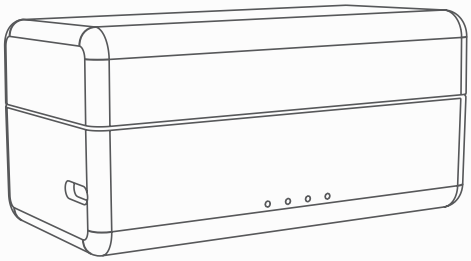

Charging Case ×1

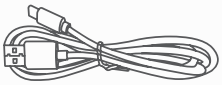

USB-C Charging Cable ×1

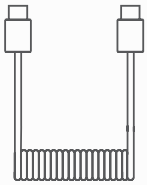

USB-C to USB-C Connecting Cable ×1

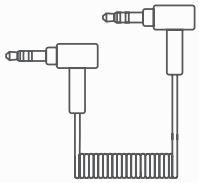

TRS-TRS Connecting Cable ×1



Magnet ×8

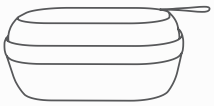

Storage Bag ×1



Portable Rope ×4



Magnetic Clip ×4



Furry Windscreen ×4

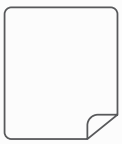

Cartoon Stickers ×1



Instruction Manual ×1

Note:
Due to continuous updates and upgrades of the products, there may be differences between the actual products and the pictures. Therefore, the pictures are for reference only, products to prevail in kind.

Using Instructions

Transmitter Cube-S TX

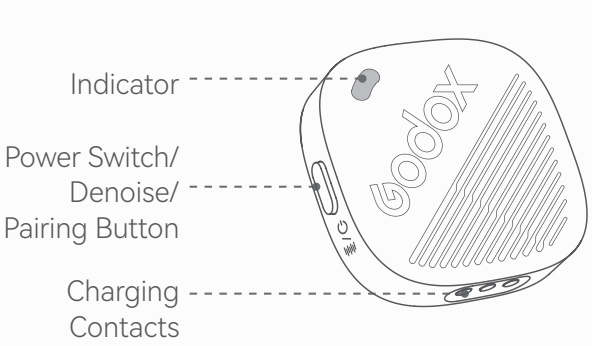

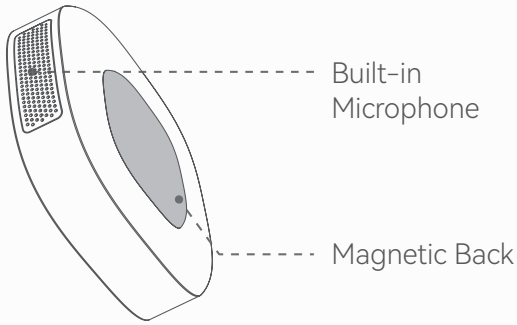

Power Switch

The transmitter will automatically turn on after taking out of the charging case, and turn off after putting into the charging case. Long press the power switch button < ↻/≣ > for 2s to turn on or off the transmitter.

- **Flash green** ---- Unpaired after powered on

Note: The transmitter will be turned off if it stays unpaired in 5min after powered on.

Pairing

short press twice the pairing button < ↻/≣ > to pair it with the receiver.

- **Flash green rapidly** ---- Pairing status
- **Constant on green** ---- Paired with denoise off

Denoise

Short press the denoise button < ↻/≣ > to turn on or off the denoise function.

- **Constant on orange** ---- Denoise function is on

Charging

The transmitter can be charged after putting into the charging case correctly.

- **Flash red** ---- Low battery level
- **Breathe blue** ---- Charging
- **Constant on blue** ---- Fully charged

Receiver Cube-C4 RX

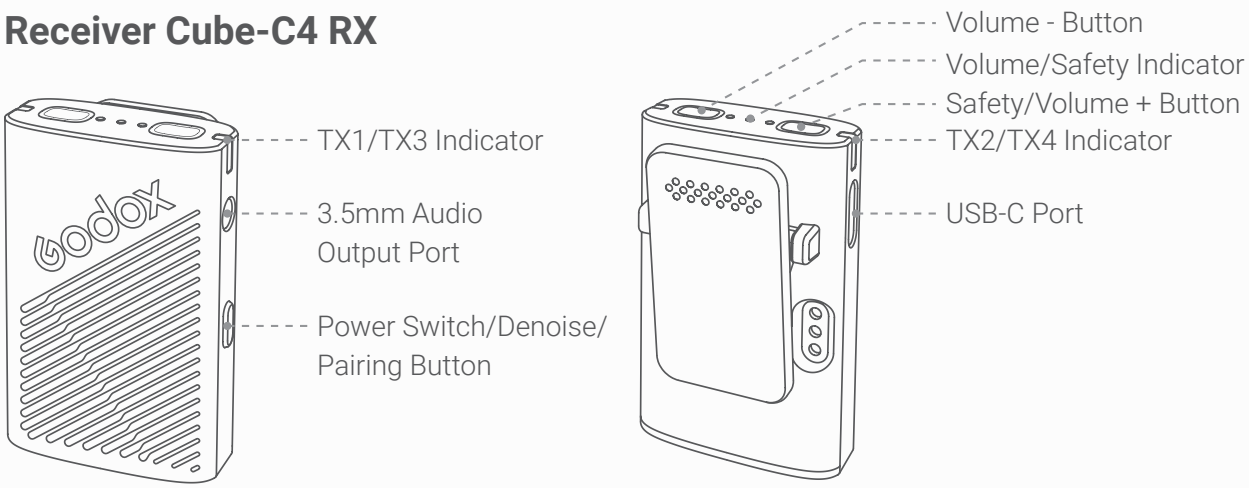

Power Switch

Long press the power switch button < ⏻ > for 2s to turn on or off the receiver.

- **Flash green** ---- Unpaired after powered on

Note: The receiver will be turned off if it stays unpaired in 5min after powered on.

Pairing

short press twice the pairing button < 🔗/〰 > to pair it with the transmitter.

- **Flash green rapidly** ---- Pairing status
- **Constant on white** ---- TX1 & TX3 or TX2 & TX4 paired

Constant on green ---- only one TX either on the left or the right is paired

Instructions for Pairing Indicators	
Only TX1 and TX2 are paired	TX1/TX3 indicator and TX2/TX4 indicator are constant on green
TX1 and TX3 or TX2 and TX4 are paired	TX1/TX3 indicator and TX2/TX4 indicator are constant on white
TX1, TX2 and TX3 are paired, TX4 is unpaired	TX1/TX3 indicator is constant on white, TX2/TX4 is constant on green
Note: In a similar manner, indicator be constant on white means the corresponding TX1 and TX3 or TX2 and TX4 are paired. Indicator be constant on green means only one TX either on the left or the right is paired.	

Denoise

Short press the denoise button < / > to turn on or off the denoise function.

Constant on orange ---- Denoise function is on

Charging

The receiver can be charged after connecting to power source through the USB-C charging cable.

Constant on red ---- Battery level of receiver is low, please charge it

- **Breathe blue** ---- Charging
- **Constant on blue** ---- Fully Charged

Safety Track Mode

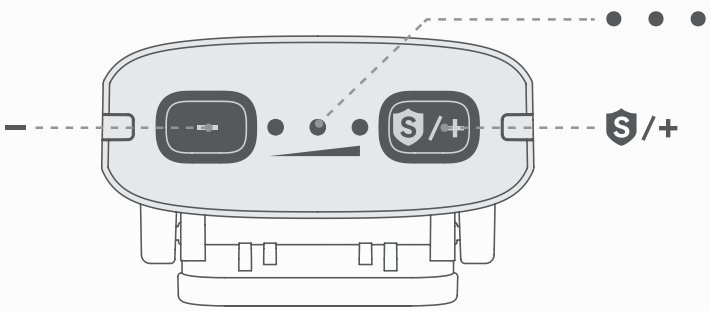

Long press the safety/volume + button < S/+ > for 2s can turn on or off the safety mode.

< ● ● ● > **Breathe green** ---- Safety mode

Note: The safety mode is in mono track by default and the right channel will record the audio with -6dB gain.

Output Volume Adjustment

Short press the safety/volume + button < S/+ > or volume – button < – > to enter volume adjustment status, then short press the volume + button or volume – button in 3s can adjust the output volume in 3 levels.

< ● > **One indicator is on** ---- Lowest volume level
< ● ● > **Two indicators are on** ---- Medium volume level
< ● ● ● > **Three indicators are on** ---- Highest volume level

Cube-C4 Charging Case

Charge the Case Itself

The charging case can be charged via the USB-C charging cable, the indicators on it will flash incrementally

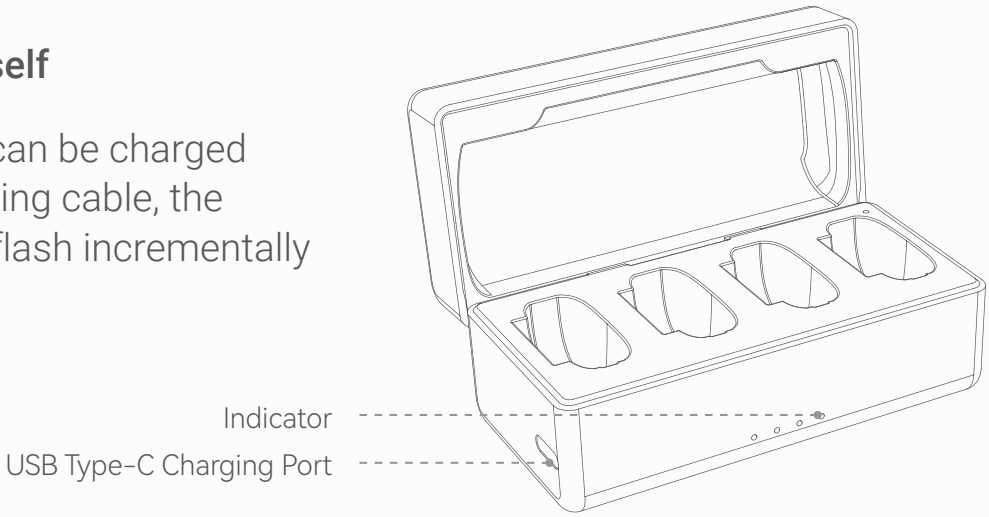

< •••• > **Flash white** ---- Charging

< •••• > **Constant on white** ---- Fully charged, then turn off in10min

Note: Recharge every 3 months or so to keep the battery alive. Sitting idle for a long timemay affect its performance or even cause permanent damage to the battery.

Transmitter Installation

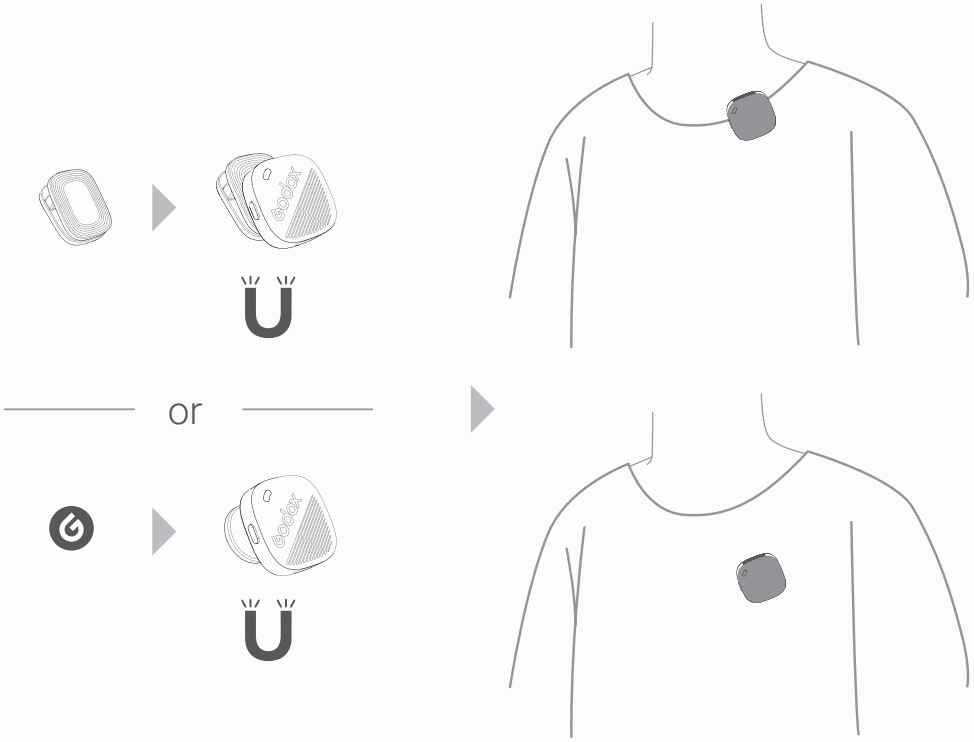

Mount the Receiver onto Cameras

3.5mm TRS-TRS
connecting cable

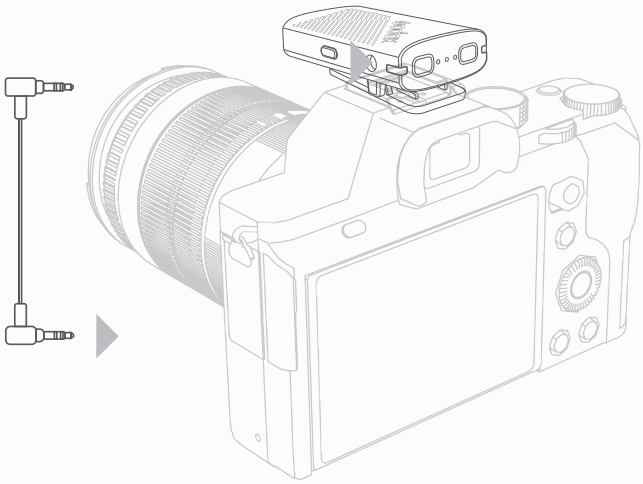

Mount the Receiver onto Smartphones

Smartphones with USB-C port

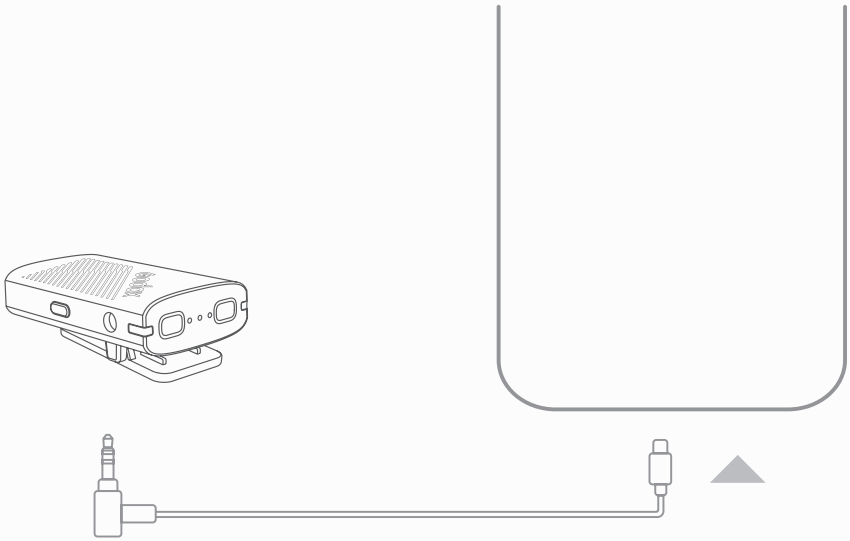

① USB-C to 3.5mm TRS
connecting cable (GAC-IC9)

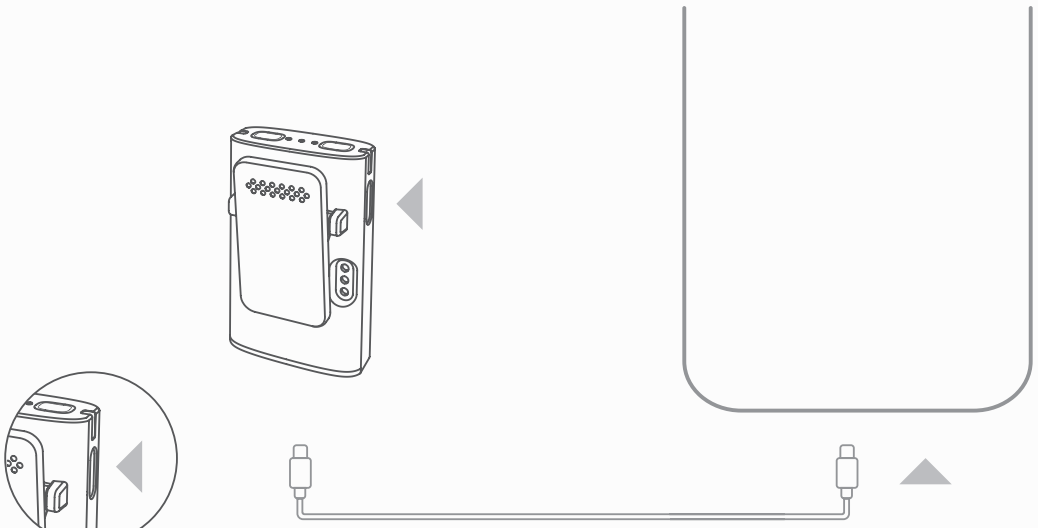

② USB-C to USB-C connecting cable (GAC-IC15)

Smartphones with Lightning port

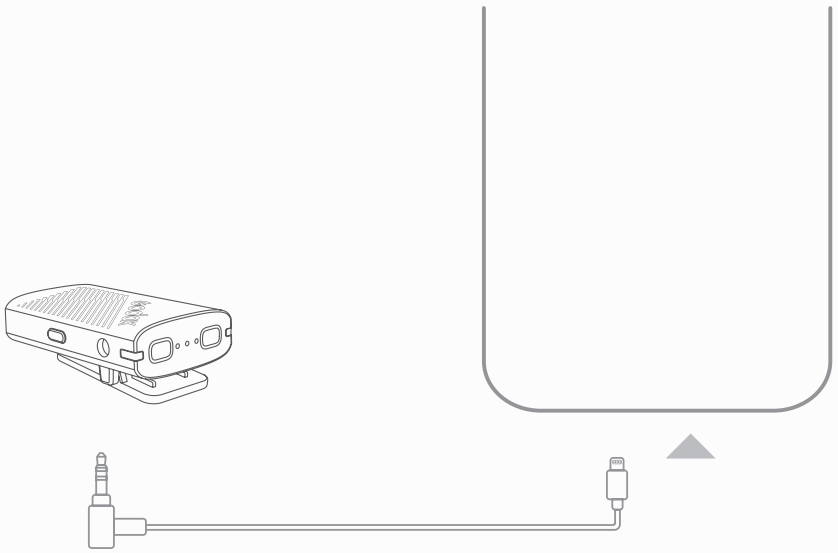

① Lightning to 3.5mm TRS connecting cable (GAC-IC10)

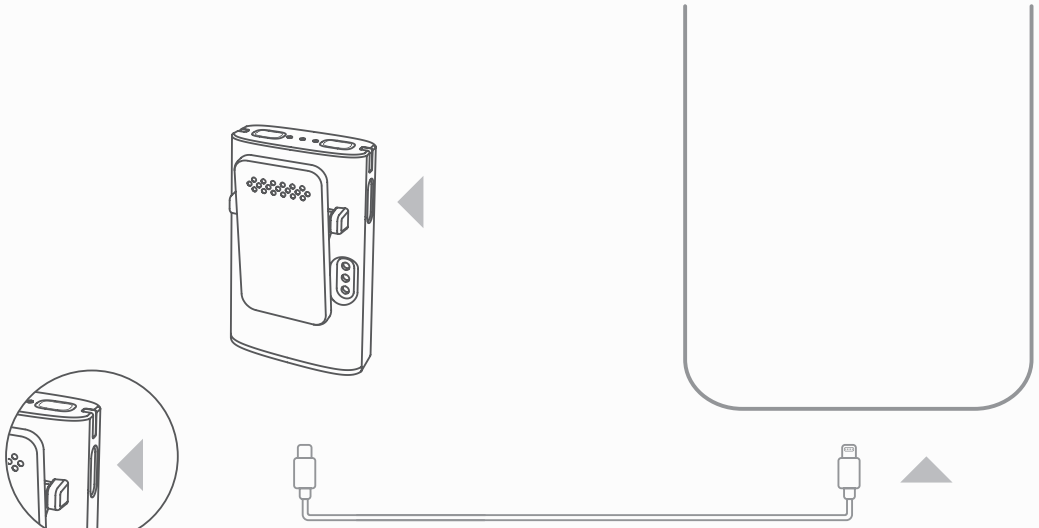

② USB-C to Lightning connecting cable (GAC-IC16)

Note: GAC-IC9, GAC-IC10 and GAC-IC16 are sold separately.

APP Downloading

Scan the QR code to download the Godox Mic app, it can control the use of this product after connection.

Note: The app is available when connecting to smartphone with USB-C to USB-C cable or USB-C to Lightning cable.

Technical Data

Name	Transmitter	Receiver
Model	Cube-S TX	Cube-C4 RX
Transmission Type	2.4GHz Frequency Hopping System	
Pickup Pattern	Omnidirectional	/
Frequency	20Hz-20KHz	/
Max. SPL	115dB	/
SNR	> 70dB	/
Max. Wireless Distance	200m (sight distance)	
Input Parameters	5V ⎓ 90mA	5V ⎓ 200mA
Lithium Battery Parameters	3.87V, 97mAh, 0.376Wh	3.8V,200mAh, 0.76Wh
Working Time	Approx. 10h	Approx. 5.5h (with denoise off)
Charging Time	Approx. 1.5h	Approx. 1.5h
Working Environment	-10℃ ~50℃	
Charging Temperature	0℃ ~45℃	
Dimension	0.96"x0.98"x0.49"	1.81"×1.14"×0.71"
Net Weight	≈ 7g	≈ 15g

Name	Charging Case
Model	Cube-C4 Charging Case
Input Parameters	5V ⎓ 2A
Output Parameters	5V ⎓ 100mA (*4)
Total Output	5V ⎓ 400mA
Battery Energy	3.8V,2300mAh, 8.74Wh
Working Time	Charge 4 transmitters twice
Charging Time	Approx. 2h
Working Environment	-10℃ ~50℃
Charging Temperature	0℃ ~45℃
Dimension	3.23"×1.57"×1.5"
Net Weight	≈ 101g

Specifications and data may subject to changes without notice.

Marking Information

Model: Cube-S TX

® 210-234905

Made in China

Li-ion Battery: 3.87V, 97mAh, 0.376Wh **FCC ID: 2ABYN146**

Input: 5V ⎓ 90mA GODOX Photo Equipment Co., Ltd.

Model: Cube-C4 RX Battery: 3.8V，200mAh，0.76Wh

USB-C Input: 5V ⎓ 200mA

® 219-247158

Made in China

FCC ID: 2ABYN137 GODOX Photo Equipment Co., Ltd.

Warning

Operating Frequency: 2402MHz- 2480MHz
Cube-S TX Maximum EIRP Power: -1.14dBm
Cube-C4 RX Maximum EIRP Power: 4.21dBm

Declaration of Conformity

GODOX Photo Equipment Co.,Ltd. hereby declares that this equipment are in compliance with the essential requirements and other relevant provisions of Directive 2014/53/EU. In accordance with Article 10(2) and Article 10(10), this product is allowed to be used in all EU member states. For more information of DoC, Please click this web link:
https://www.godox.com/eu-declaration-of-conformity
The device complies with RF specifi cations when the device used at 0mm from your body

FCC Statement

This device complies with part 15 of the FCC Rules. Operation is subject to the following two conditions:
(1) This device may not cause harmful interference, and
(2) this device must accept any interference received, including interference that may cause undesired operation.Any Changes or modifi cations not expressly approved by the party responsible for compliance could void the user's authority to operate the equipment.

Note: This equipment has been tested and found to comply with the limits for a Class B digital device, pursuant to part 15 of the FCC Rules. These limits are designed to provide reasonable protection against harmful interference in a residential installation. This equipment generates uses and can radiate radio frequency energy and, if not installed and used in accordance with the instructions, may cause harmful interference to radio communications. However, there is no guarantee that interference will not occur in a particular installation. If this equipment does cause harmful interference to radio or television reception, which can be determined by turning the equipment off and on, the user is encouraged to try to correct the interference by one or more of the following measures:
-Reorient or relocate the receiving antenna.
-Increase the separation between the equipment and receiver.
-Connect the equipment into an outlet on a circuit different from that to which the receiver is connected.
-Consult the dealer or an experienced radio/TV technician for help.
The device has been evaluated to meet general RF exposure requirement. The device can be used in portable exposure condition without restriction.

IC Warning

This device complies with Innovation, Science and Economic Development Canada licence-exempt RSS standard(s). Operation is subject to the following two conditions:
(1) This device may not cause interference, and
(2) This device must accept any interference, including interference that may cause undesired operation of the device. Cet appareil est conforme aux normes RSS exemptées de licence d'Innovation, Sciences et Développement économique Canada. L'exploitation est soumise aux deux conditions suivantes:
(1) Cet appareil ne peut pas causer d'interférences, et
(2) Cet appareil doit accepter toute interférence, y compris celles qui pourraient entraîner un fonctionnement accidentel de l'appareil.
Any Changes or modifications not expressly approved by the party responsible for compliancecould void the user's authority to operate the equipment.
Tout changement ou modification non expressément approuvé par la partie responsible de la réglementation de l'OCDE peut faire perdre à l'utilisateur le droit d'utiliser l'appareil.

Note: This equipment has been tested and found to comply with the limits for a Class B digital device, pursuant to part 15 of the FCC Rules. These limits are designed to provide reasonable protection against harmful interference in a residential installation.
This equipment generates uses and can radiate radio frequency energy and, if not installed and used in accordance with the instructions, may cause harmful interference to radio communications. However, there is no guarantee that interference will not occur in a particular installation. If this equipment does cause harmful interference to radio or television reception, which can be determined by turning the equipment off and on, the user is encouraged to try to correct the interference by one or more of the following measures:
-Reorient or relocate the receiving antenna.
-Increase the separation between the equipment and receiver.
-Connect the equipment into an outlet on a circuit different from that to which the receiver is connected.
-Consult the dealer or an experienced radio/TV technician for help.
Remarque: cet appareil a été testé pour répondre aux limites des appareils numériques de classe B conformément à la partie 15 des règles de la Federal Communications Commission des États - Unis. Ces limites sont conçues pour fournir une protection raisonnable contre les interférences nuisibles dans les installations résidentielles. L'appareil génère de l'énergie RF utilisée et rayonne, ce qui peut causer des interférences nocives pour les communications radio s'il n'est pas installé et utilisé conformément aux instructions. Cependant, aucunGarantie contre les interférences dans une installation spécifique. Si l'appareil

cause des interférences nuisibles à la réception de la radio ou de la télévision, qui peuvent être déterminées en éteignant et en allumant l'appareil, l'utilisateur est encouragé à tenter de corriger les interférences par une ou plusieurs des mesures suivantes:
- redirection ou repositionnement de l'antenne de réception.
- augmenter l'espacement entre l'appareil et le récepteur.
- Connecter l'appareil à une prise sur un circuit différent de celui auquel le récepteur est connecté.
- consultez votre revendeur ou un technicien radio / tv expérimenté pour obtenir de l'aide.

RF warning for Portable device: The device has been evaluated to meet general RF exposure requirement. The device can be used in portable exposure condition without restriction.

Avertissement RF pour les appareils portables:
L'appareil a été évalué pour répondre aux exigences générales d'exposition aux radiofréquences. ÉquipementPeut être utilisé sans restriction dans des conditions d'exposition portables.

产品保修

尊敬的用户, 本保修卡是申请保修服务的重要凭证, 请您配合销售商填写并妥善保管, 谢谢!

产品信息	型号	产品条码
用户信息	姓名	联系电话
	通信地址	
销售商信息	名称	
	联系电话	
	通信地址	
	销售日期	
备注		

注: 此表应由销售商盖章确认。

产品信息

本文件适用于相关《产品保修信息》(见后面说明) 所列产品，其他非属此范围的产品或部件 (如促销品、赠品及其他出厂后附加的部件等) 不在此保修承诺内。

保修期

产品及部件的相应保修期按相关的《产品保修信息》执行。保修期自产品首次购买日起算，购买日以购买产品时保修卡登记日期为准。

如何获得保修服务

您可直接与产品销售商或授权服务机构联系，也可拨打神牛产品售后服务电话，与我们联系，由我们的服务人员为您安排服务。申请保修时，您应提供有效的保修卡作为保修凭证，方可获得保修。如您不能提供有效的保修卡，则在我们确认产品或部件属于保修范围的情况下，也可以为您提供保修，但这不作为我们的义务。

不适用保修情况

如产品存在下列情况，本文件项下的保证和服务将不适用：**①产品或部件超过相应保修期；②错误或不适当使用、维护或保管导致的故障或损坏，如：不当搬运；非按产品合理预期用途使用；不当插拔外接设备；跌落或外力挤压；接触或暴露于不适当温度、溶剂、酸碱、水浸或潮湿环境；③由非神牛授权机构或人员安装、修理、更改、添加或拆卸造成的故障或损坏；④产品或部件原有识别信息被修改变更或除去；⑤无有效保修卡；⑥使用非合法授权、非标准或非公开发行的软件造成的故障或损坏；⑦因不可抗力或意外事件造成的故障或损坏；⑧其他非因产品本身质量问题导致的故障或损坏。**遇上述情况，您应向相关责任方寻求解决，神牛对此不承担任何责任。因非在保修期或保修范围内的部件、附件或软件导致产品不能正常使用的，不是保修范围内的故障。产品使用过程中正常的脱色，磨损和消耗，不是保修范围内的故障。

产品保修和服务支持信息

产品的保修期和服务类型按以下《产品保修信息》执行:

产品类别	选件名称	保修期（月）	保修服务类型
部件	电路板	12	客戶送修
其他	如电源线、同步线、电池盒、防风棉、防风毛罩、锁紧装置、手提绳、扎带、魔术贴、领夹、便携袋、包装等	无	无保修

神牛产品售后服务电话 0755-29609320-8062

Warranty

Dear customers, as this warranty card is an important certificate to apply for our maintenance service, please fill in the following form in coordination with the seller and safe-keep it. Thank you!

Product Information	Model	Product Code Number
Customer Information	Name	Contact Number
	Address	
Seller Information	Name	
	Contact Number	
	Address	
	Date of Sale	
Note		

Note: This form shall be sealed by the seller.

Applicable Products

Applicable Products The document applies to the products listed on the Product Maintenance Information (see below for further information). Other products or accessories (e.g. promotional items,giveaways and additional accessories attached,etc.) are not included in this warranty scope.

Warranty Period

The warranty period of products and accessories is implemented according to the relevant Product Maintenance Information. The warranty period is calculated from the day(purchase date) when the product is bought for the first time,And the purchase date is considered as the date registered on the warranty card when buying the product.

How to Get the Maintenance Service

If maintenance service is needed, you can directly contact the product distributor or authorized service institutions. You can also contact the Godox after-sale service call and we will offer you service. When applying for maintenance service, you should provide valid warranty card. If you cannot provide valid warranty card, we may offer you maintenance service once confirmed that the product or accessory is involved in the maintenance scope, but that shall not be considered as our obligation.

Inapplicable Cases

The guarantee and service offered by this document are not applicable in the following cases: ① The product or accessory has expired its warranty period; ② Breakage or damage caused by inappropriate usage, maintenance or preservation, such as improper packing, improper usage, improper plugging in/out external equipment, falling off or squeezing by external force, contacting or exposing to the improper temperature, solvent, acid, base, flooding and damp environments, etc; ③ Breakage or damage caused by non-authorized institution or staff in the process of installation, maintenance, alternation, addition and detachment; ④ The original identifying information of product or accessory is modified, alternated, or removed; ⑤ No valid warranty card; ⑥ Breakage or damage caused by using illegally authorized, nonstandard or non-public released software; ⑦ Breakage or damage caused by force majeure or accident; ⑧ Breakage or damage that could not be attributed to the product itself. Once met these situations

above, you should seek solutions from the related responsible parties and Godox assumes no responsibility. The damage caused by parts, accessories and software that beyond the warranty period or scope is not included in our maintenance scope.

Maintenance and Service Support Information

The warranty period and service types of products are implemented according to the following Product Maintenance Information:

Product Type	Name	Maintenance Period(month)	Warranty Service Type
Parts	Circuit Board	12	Customer sends the product to designated site
Other Items	Power Cable, Sync Cable, Battery Case, Windscreen Foam, Wind Cap, Locking Device, Lanyard, Tie, Velcro Tape, Clip, Bag, Package etc.	No	Without warranty

Godox After-sale Service Call 0755-29609320-8062